# Power Supply
# Type PS20
# v3.2

CE

## PRODUCT DESCRIPTION

The PS20 is dedicated for electronic equipment which require 12VDC buffered supply source. Device consist of metal case with compartment for sealed lead-acid battery, mains transformer and electronic circuit. PS20 may deliver up to 2A current without any time limit, it utilize DC/DC "switched mode" electronic circuit which offer high efficiency (reduced heating of electronic components). PS20 employs internal current limiting and short circuit protection which make it essentially indestructible. The reserve battery is connected to output terminals trough an ultra low-resistance MOS transistor, such a circuit architecture enables optimum performance during AC failure and during dynamic changes of load when excessive current consumption is required. PS20 charge battery with *constant current-constant voltage* method, this method of charging guaranties relatively quick and safe charging process. The initial charging current is factory set to ~300mA, installer should be aware that with battery connected to PS the output current will be reduced to 1700mA. Depending on battery charging phase the output voltage of PS20 may vary from approx. 11.5 up to 13.8V level. When battery voltage drops below ~10.0V level internal circuit disconnect it from load, battery is automatically reconnected when AC supply returns. Battery cut off circuit protect battery from deep discharge but the equipment connected to power supply from operation below 10.0V level which in many cases can lead to undefined system behavior. Battery is protected with 5A fuse which reduce maximum output current sourced from battery and electronic circuit against battery reverse connection. PS20 offer two output ports (Z1 and Z2 terminals). The nominal output voltage is factory set to 13.8V and should not be changed by user. PS20 is equipped with two LEDs, the red one (marked as 230VAC) signalize that AC power exists where the second one (marked as 12VDC) signalize that output voltage is available.

## OPTIONAL ALARM MODULE PSAM-1

For more sophisticated installation electronic circuit of PS20 can be equipped with optional alarm module (PSAM-1). This module can be connected to PS20 circuit through dedicated connector (CON4) which is located on PS20 board. The main purpose of PSAM-1 module is to signalize an alarm situation of power supply to external device or system. The PSAM-1 may operate in autonomic or networked mode. When set to autonomic mode it offer three transistors outputs which are dedicated to signalize following situations:

- low battery
- battery failure
- AC lost

Those outputs can be connected to external control panel, access controller or another control or signaling device which will warn authorized personnel.
When PSAM-1 operates in networked mode it must be connected to PR series access controller (PR302/PR402 or PR302LCD) through Clock & Data interface. In this mode PSAM-1 module sends all messages about power supply condition direct to access controller. During *networked* mode PSAM-1 signalize the same alarm condition as during standalone mode and additionally delivers data about actual voltage level available on PS's output terminals.

## INSTALLATION

PS20 should be mounted on wall or another surface using four screws, it may be installed in vertical or horizontal position. Power supply should be installed far enough from heat and moisture sources. All electrical connection should be carried out with AC supply off. PS20 will not start operation on reserve battery, the AC supply must exists in order to begin PS activity. The AC supply cable should be guided into PS's case using dedicated hole protected with dielectric sleeve and then firmly fixed to *230VAC* input terminals (see installation diagram). Do not adjust potentiometers located on PS20 electronic board, those components are factory set and should not be changed.

Warning

The high voltage exists on some device elements, prior to servicing the AC supply must be switched off.

### TECHNICAL SPECIFICATION

| Parameter | Value | Comments |
|---|---|---|
| AC supply | 230 VAC | RMS value |
| AC frequency | 50..60 Hz | |
| Nominal Output voltage | 13.8 VDC | Output voltage may vary from app. 12.0 up to 13.8V depending on actual battery charging phase. |
| Max. output current (without battery) | 2A | Maximum output current is guaranteed for unlimited time and for entire temp. range. During battery charging process output current will be reduced to 1700mA |
| Ambient Temperature | 0..55 °C | |
| Max. momentary output current with battery | 6A | 2.0A delivered by electronic circuit and 4.0A delivered by battery |
| Initial battery charging current | 0.3A | |
| Battery cut off voltage | 10.0V | |
| Battery compartment | 6.5Ah/12V | or 7Ah/12V |
| Dimensions | 234x165x80 | |
| Weight | 2,2 kg | Without battery |

The symbol of a crossed-through waste bin on wheels means that the product must be disposed of at a separate collection point. This also applies to the product and all accessories marked with this symbol. Products labeled as such must not be disposed of with normal household waste, but should be taken to a collection point for recycling electrical and electronic equipment. Recycling helps to reduce the consumption of raw materials, thus protecting the environment.

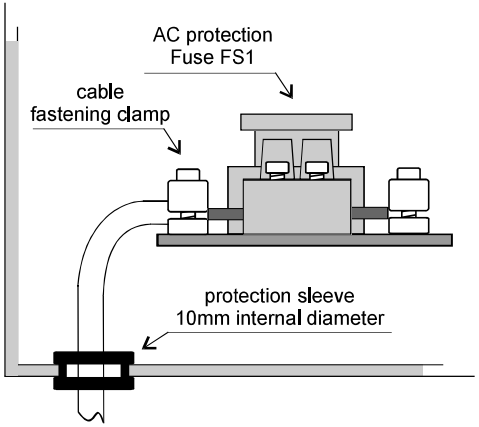


AC cable connection diagram

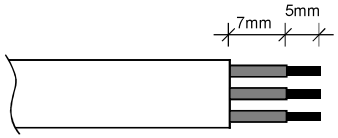


AC cable stripping method

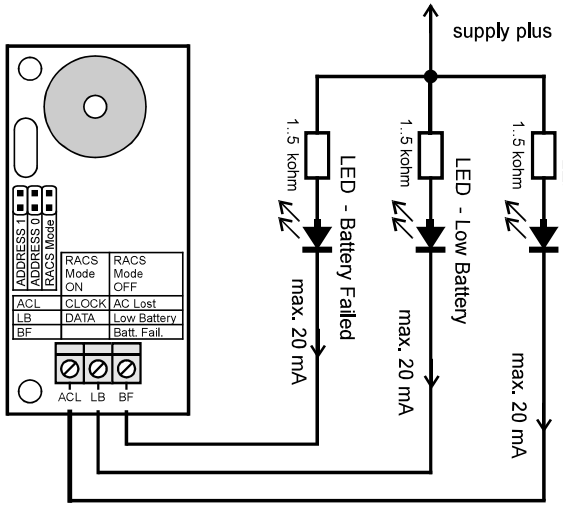


PSAM-1 autonomic mode - wiring diagram

Warning !
Do not adjust
potentiometers located
on electronic board

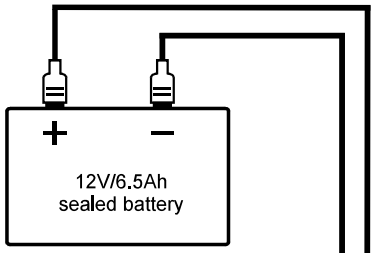


PSAM-1
optional alarm module

FS3- Battery protection fuse
5 X 20 5A Fast acting

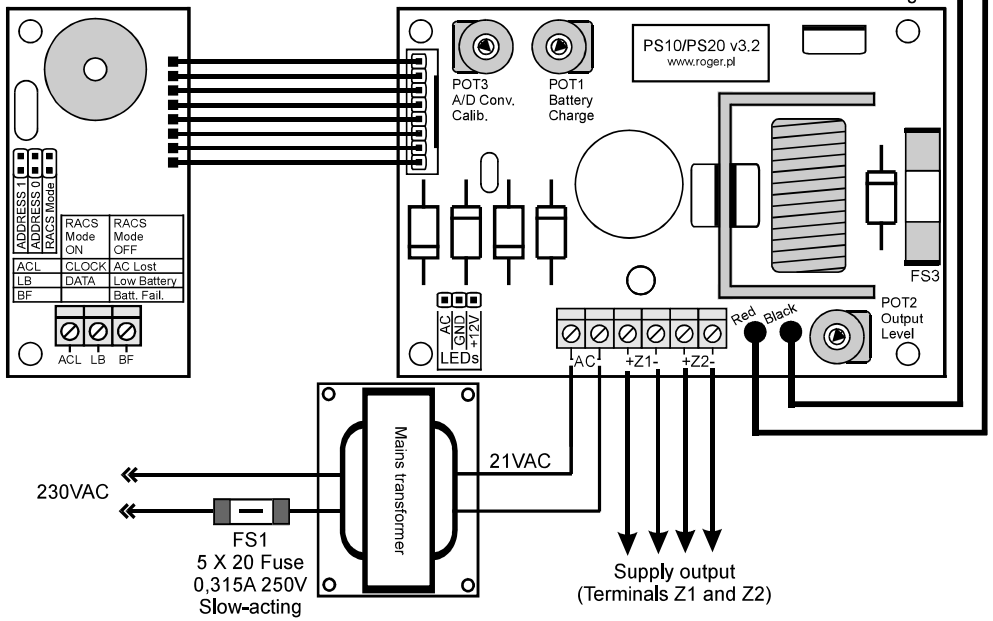


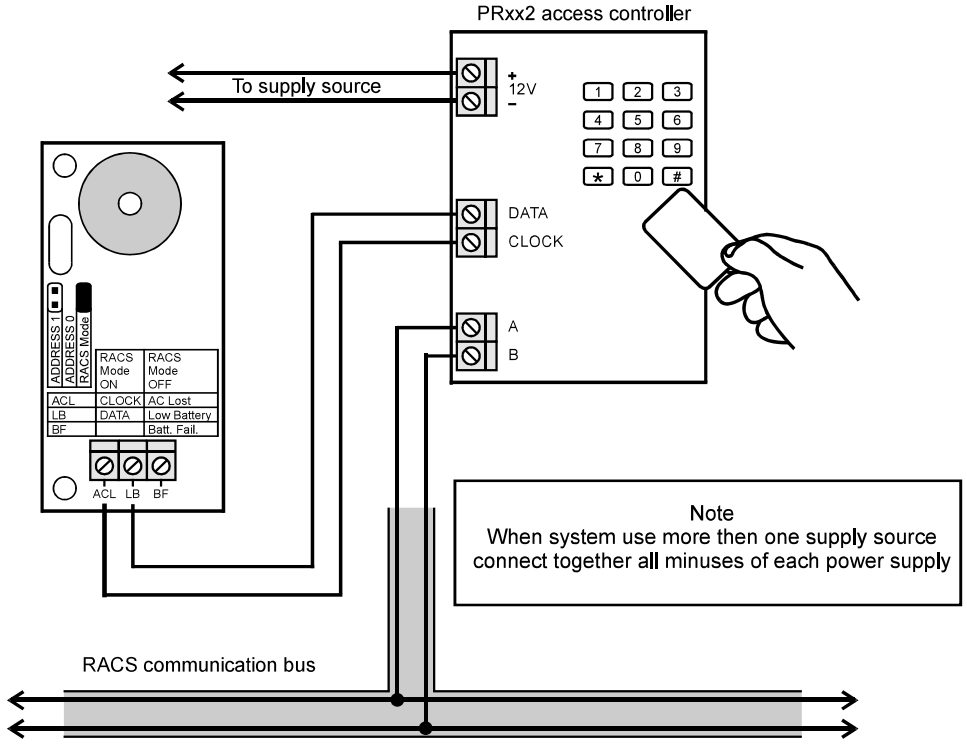


PSAM-1 networked mode - wiring diagram

# PS10/PS20 v3.2 wiring diagrams

KN022.cdr

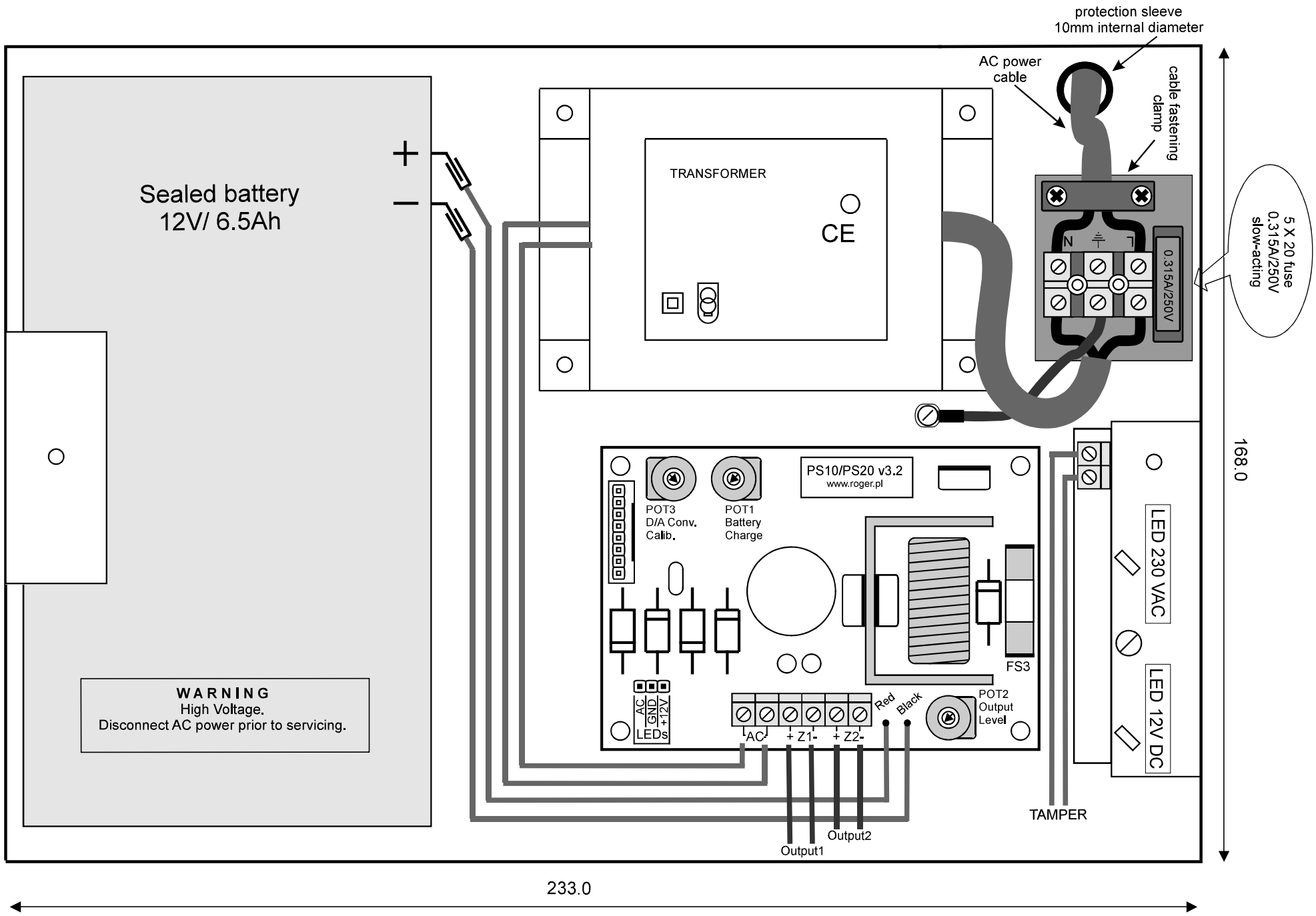


PS10/PS20 v3.2 internal view and installation/wiring diagram

KN023.cdr

# Deklaracja Zgodności EC
# Declaration of Conformity EC

CE

Producent urządzenia / manufacturer:

**ROGER sp.j.**

**82-416 Gościszewo 59, Poland**

deklaruje z pełną odpowiedzialnością, że produkt:
declares under his sole responsibility that the product:

**PS20 Zasilacz Buforowy / Buffered Power Supply**

nazwa produktu, nazwa handlowa, model / product name, trade name, model

jest zgodny z postanowieniami następujących dyrektyw:
complies to the essential requirements and other relevant requirements of the directive:

| | Numer dyrektywy / Number of directive | |
|---|---|---|
| 1. | 2004/108/EC (EMC) | Dotyczy / Applicable |
| 2. | 99/05/EC (R&TTE) | Nie dotyczy / Not applicable |
| 3. | 2006/95/EC (LVD) | Dotyczy / Applicable |

oraz z wymienionymi poniżej normami, co zostało potwierdzone przez testy przeprowadzone przez laboratorium notyfikowane:

and is compliant with the following standards and/or other normative documents, what is confirmed by tests in accredited laboratory:

| Norma / Normative document | Dyrektywa / Directive | Laboratorium / Laboratory |
|---|---|---|
| BS EN 50130-4:1996<br>PN EN 55022:2000 +A1:2003 +A1:2004 | Kompatybilność elektromagnetyczna/<br>Electromagnetic compatibility (EMC) | Instytut Elektrotechniki<br>Oddział w Gdańsku<br>The Technical Institute<br>The Gdańsk Branch, Poland |
| ---------- | Wyposażenie radiowe i terminali telekomunikacyjnych / Radio directive (R&TTE) | ---------- |
| ---------- | Niskonapięciowe wyroby elektryczne/<br>Low voltage directive (LVD) | ---------- |

Informacje dodatkowe / Additional information:
Miejsce przechowywania dokumentacji technicznej: Roger Sp.j. 82-416 Gościszewo 59.
The technical documentation is kept by Roger Sp.j. in 82-416 Gościszewo 59, Poland.

Gościszewo 20/07/2007

Miejsce i data wystawienia deklaracji
Place and date of issue of this declaration

Grzegorz Wensker
Dyrektor Techniczny / Technical Manager

===This page intentionally left blank ===

roger

# RMA Form

**ROGER Sp.j.**
Gosciszewo 59,
82-416 Gosciszewo,
pomorskie, Poland

Tel.: +48 55 272 0132
Fax: +48 55 272 0133
Tech. Support: +48 55 267 0126
http://www.roger.pl

Please note:
In the unlikely event you experience difficulties with your ROGER product, please contact ROGER's Technical Support Department to resolve the problem.
They may be reached at **+48 55 2670126** or **support@roger.pl** Monday through Friday **8:00 A.M. to 4:00 P.M. (GMT + 1)**. You can also contact the Technical Support Department by **fax** at **+48 55 2720133**.
If it is determined that you need to return the product, the following procedure must be followed to ensure prompt service.

**RMA no.**

_____

## Customer information:

Company Name: ……

Contact Name: ……..

Street: ……

Code, City: ……

Country: ……..

E-mail: ……

Contact phone: ……..

Fax: ……..

## Product information:

Product Name: ……

Serial Number: ……..

Date of Purchase: ……

## Reason for return:

☐ Warranty repair:
☐ Repair:
☐ Complaint:
☐ Wrong delivery:
Others: ……
……
(please specify)

## Fault description:

what does not work, what is the reason for complaint, what can ROGER do for you ?

……
……
……
……
……
……
……
……
……
……

Please note:
In the unlikely event you experience difficulties with your ROGER product, please contact ROGER's Technical Support Department to resolve the problem.
They may be reached at **+48 55 2670126** or **support@roger.pl** Monday through Friday **8:00 A.M. to 4:00 P.M. (GMT + 1)**.
You can also contact the Technical Support Department by **fax** at **+48 55 2720133**.
If it is determined that you need to return the product, the following procedure must be followed to ensure prompt service.

**1.** Any product returned to ROGER must have an RMA number. ROGER will refuse any package that is returned without a valid RMA number.

**2.** ROGER products cannot be returned for any reason other than defective

**3.** Defective products will only be accepted in accordance with the ROGER`s warranty requirements.

**4.** All RMA numbers will be valid for a period of not longer than 14 days.

Any package send to ROGER after 14 days of issuance will be refused and shipped back to you at additional cost.

**5.** If you purchased Roger product not directly from Roger company, please return it to the place where you bought it.

**6.** In order to receive RMA number please fill out the following form.

**7.** Once the completed form has been received and processed it will be returned to you with a RMA number appended. This is your authority to return the product.

**8.** Please ensure that this document accompanies the product when it is returned and that a copy is retained such that you can refer to it when requesting an update on the progress of a repair.

**9.** Use one RMA number per one returned product.

**10.** Put your RMA number on the shipping/address label

**11.** Please make sure that you always return product in appropriate packaging together with a RMA form in order to avoid damages during transit, You are advised to get proof of delivery

**12.** Some repairs may be chargeable and you will receive formal advice if this is the case.

**13.** If product returned as defective is found **not** to be defective, it will be returned back to the customer at his expenses. In that case the customer will be also charged with costs which may arise after triggering the RMA procedure.

**14.** If the product is beyond economical repair then the following options will be given:

**Scrapped** – This will occur automatically if ROGER does not receive a reply to three notices send to the customer at least in 5 days interval.
(There may be some exceptions to this) or if you instruct us during these communications.
**Returned** – However this will incur shipping charges.

**Note:** All repairs are dealt with as rapidly as possible although repair time is not guaranteed. Please contact us and we will try our best to suggest an estimated lead-time.

| **Notes** |
| --- |
| |

| **No.** | **Fault description**<br>(filled out by the customer) | **Date of repair**<br>(filled out by the service) |
| --- | --- | --- |
| 1. | | |
| 2. | | |
| 3. | | |
| 4. | | |
| 5. | | |

# Roger Worldwide Limited Warranty

(valid only with proof of purchase and when completely fulfilled)

**ROGER Sp.j.**
Gosciszewo 59,
82-416 Gosciszewo,
pomorskie, Poland

Tel: +48 55 272 0132
Fax: +48 55 272 0133
Tech. support: +48 55 267 0126
http://www.roger.pl

Please note:
In the unlikely event you experience difficulties with your ROGER product, please contact ROGER's Technical Support Department to resolve the problem. Call us from Monday through Friday **8:00 A.M. to 4:00 P.M. (GMT + 1) or send email: support@roger.pl**.

## PRODUCT INFORMATION:

Product Name: ……

……

……

Serial Number: ……

Date of Purchase, Purchase receipt: ……

## WARRANTY TERMS:

ROGER sp.j. (Roger) Worldwide Limited Warranty is applicable worldwide and supersedes any other warranty.

**WARRANTY**

This limited warranty extends only to the original purchaser of the Roger product.

**WARRANTY DURATION**

Roger warrants to You (original purchaser) that for a period of one year (the "Warranty Period") from the date of original purchase, limited by the end of 3 years period starting with the date of manufacture, your Roger Product will be substantially free of defects in materials and workmanship under normal use.

**WARRANTY COVERAGE**

If the Product proves defective during the Warranty Period please contact Roger Technical Support. BE SURE TO HAVE YOUR PROOF OF PURCHASE ON HAND WHEN CALLING.

If ROGER receives defective product (together with a copy of your original proof of purchase and RMA Number), ROGER will either repair or replace parts which, under normal conditions of use and service, prove to be defective in material or workmanship.

No charge will be made for labor or parts with respect to defects covered by this warranty, provided that the work is done by Roger or a Roger authorized service center.

This warranty does not cover expenses incurred in the transportation, removal or reinstallation of the product, whether or not proven defective.

Replacements or repairs furnished under this warranty are subject to the same terms and conditions of the original warranty.

**EXCLUSIONS AND LIMITATIONS**

This warranty does not apply if the Product (a) has been altered, except by Roger, (b) has not been installed, operated, repaired, or maintained in accordance with instructions supplied by Roger, or (c) has been subjected to abnormal physical or electrical stress, misuse, negligence, or accident. In addition, due to the continual development of new techniques for intruding upon and attacking networks, Roger does not warrant that the Product will be free of vulnerability to intrusion or attack.

This warranty does not cover repair or replacement where normal use has exhausted the life of a part or instrument.

ALL IMPLIED WARRANTIES AND CONDITIONS OF MERCHANTABILITY OR FITNESS FOR A PARTICULAR PURPOSE ARE LIMITED TO THE DURATION OF THE WARRANTY PERIOD. ALL OTHER EXPRESS OR IMPLIED CONDITIONS, REPRESENTATIONS AND WARRANTIES, INCLUDING ANY IMPLIED WARRANTY OF NON-INFRINGEMENT, ARE DISCLAIMED.

IN NO EVENT WILL ROGER BE LIABLE FOR ANY LOST DATA, REVENUE OR PROFIT, OR FOR SPECIAL, INDIRECT, CONSEQUENTIAL, INCIDENTAL OR PUNITIVE DAMAGES, REGARDLESS OF THE THEORY OF LIABILITY (INCLUDING NEGLIGENCE), ARISING OUT OF OR RELATED TO THE USE OF OR INABILITY TO USE THE PRODUCT (INCLUDING ANY SOFTWARE), EVEN IF ROGER HAS BEEN ADVISED OF THE POSSIBILITY OF SUCH DAMAGES. IN NO EVENT WILL ROGER' LIABILITY EXCEED THE AMOUNT PAID BY YOU (original purchaser) FOR THE PRODUCT, WITH THE LIMITATION THAT THE AMOUNT CAN NOT BE HIGHER THAN ROGER'S RECOMMENDED ENDUSER PRICE (WHICH IS AVAILABLE ON REQUEST DIRECTLY FROM ROGER).

The foregoing limitations will apply even if any warranty or remedy provided under this Agreement fails of its essential purpose. The terms of this warranty may not be varied by any person, whether or not purporting to represent or act on behalf of Roger.

**This warranty represents the full extent of Roger's responsibility.** This warranty shall become null and void in the event of a violation of the provisions of this limited warranty.

……

Date, sign and stamp of the seller

KG/rev.05/EN